AV - PSD Series 100W

Whole Family: AV-PSD-24V-100W

Features

Output:	Constant Voltage
Range:	100-277VAC
PFC design:	Built-in active PFC function
Efficiency:	Up to 89%
Protections:	Short circuit / Over load / Over temperature
Heat dissipation:	Cooling by free air convection
Waterproof performance:	Driver built-in Junction box, for dry, damp and wet locations.
Dimming function:	Phase dimming: work with Forward phase, MLV and Reverse phase, ELV, TRIAC dimmers. 0-10V dimming: 0-10V/1-10V/Potentiometer/10V PWM 4 in 1.
Dimming range:	0-100% dimmingdepth0.1%
Application:	Suitable for the application of LED lighting
Warranty:	3 years warranty
Others:	PWM output, High power factor PF>0.9, Flicker-free dimming

AVERYLED
Professional LED Solutions

TRIAC & 0-10V Dimmable LED Driver - Constant Voltage Output - AV - PSD Series 100W

Specification

Model		
Certificate		
Output	DC Voltage	24V
	Voltage Tolerance	±0.5V
	Voltage Regulation	±0.5%
	Rated Current	4.17A
	Rated Power	100W
	Load Regulation	±1%
Input	Voltage Range	100-277VAC
	Frequency Range	40-60Hz
	Power Factor @ Full Load	>0.9
	THD (Typ.) @ Full Load	<20% @120VAC & 277VAC
	Efficiency (Typ.) @ Full Load	≥85%@120VAC / ≥86%@277VAC
	AC Current (Max.)	1.5A
	Inrush Current (Typ.)	60.0A
	Leakage Current	<0.5mA
Protection	Short Circuit	Shutdown o/p voltage, re-power on to recover after fault condition removed.
	Over Load	105%~110% shutdown o/p voltage, re-power on to recover after fault condition removed.
	Over Temperature	Shell surface temp. 100°C ±10°C shutdown o/p voltage, automatically recover after cooling.
Environment	Working Temp.	-40~+45°C (see derating curve)
	Working Humidity	20-95% RH non-condensing
	Storage Temp. / Humidity	-40~+80°C, 10-95% RH non-condensing
	Temp. Coefficient	±0.03%/°C (0-50°C)
	Vibration	10~500Hz, 5G 12min./1 cycle, period for 72min. each along X, Y, Z axes
Safety & EMC	Safety Standards	UL8750; CAN/CSA-C22.2 No.250.13
	Withstand Voltage	I/P-O/P: 1.88KVAC I/P-FG: 1.88KVAC O/P-FG: 0.5KVAC
	Isolation Resistance	I/P-O/P: 100MΩ/500VDC/25°C/70%RH
	EMC Immunity	FCC/ICES do not request this test.
	EMC Emission	FCC 47CFR Part 15, Subpart B
Others	Net Weight	1.375KG
	Dimension	220 × 95.4 × 43.8mm (L × W × H)
	Packing	298 × 265 × 220mm / 10 pcs/CTN
Notes	1. All parameters NOT specially mentioned are measured at 120VAC input, rated load and 25°C of ambient temperature.	
	2. Tolerance: includes setup tolerance and load regulation.	

MCB recommendation

When the input voltage is 120Vac,the number of LED Driver matched by circuit breakers is as follows:		
MCBType	Level	Thenumberof LEDDriver
Ctype	10A	7
	13A	9
	16A	11
	20A	13
	25A	15
When the input voltage is 277Vac,the number of LED Driver matched by circuit breakers is as follows:		
MCBType	Level	Thenumberof LEDDriver
Ctype	10A	4
	13A	5
	16A	6
	20A	8
	25A	10

Note:

1. The above quantities of the led drivers connected on the Type C is recommended base on the maximum ambient temperature is 50 °C.
2. The breaker should be selected according to the input rated voltage, input rated current, ambient temperature, and trip characteristic curve.

Efficiency Curve (efficiency vs output load)

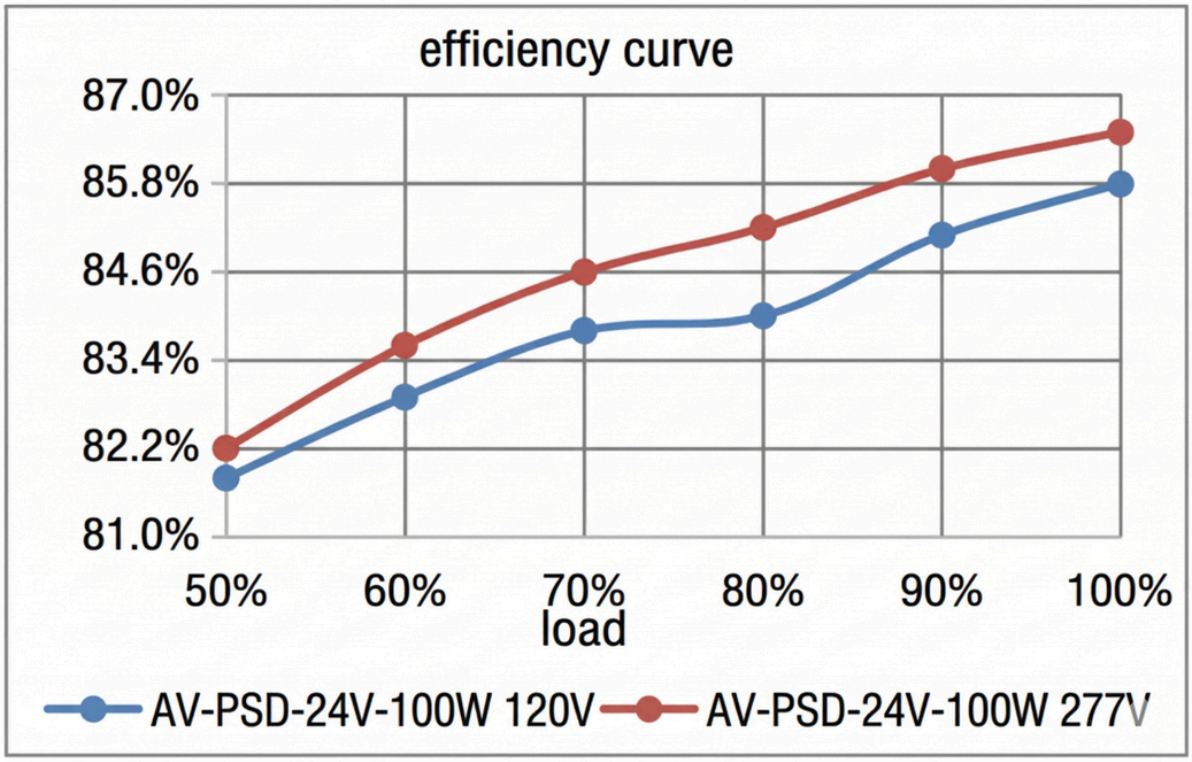

Power Factor Curve (power factor vs output load)

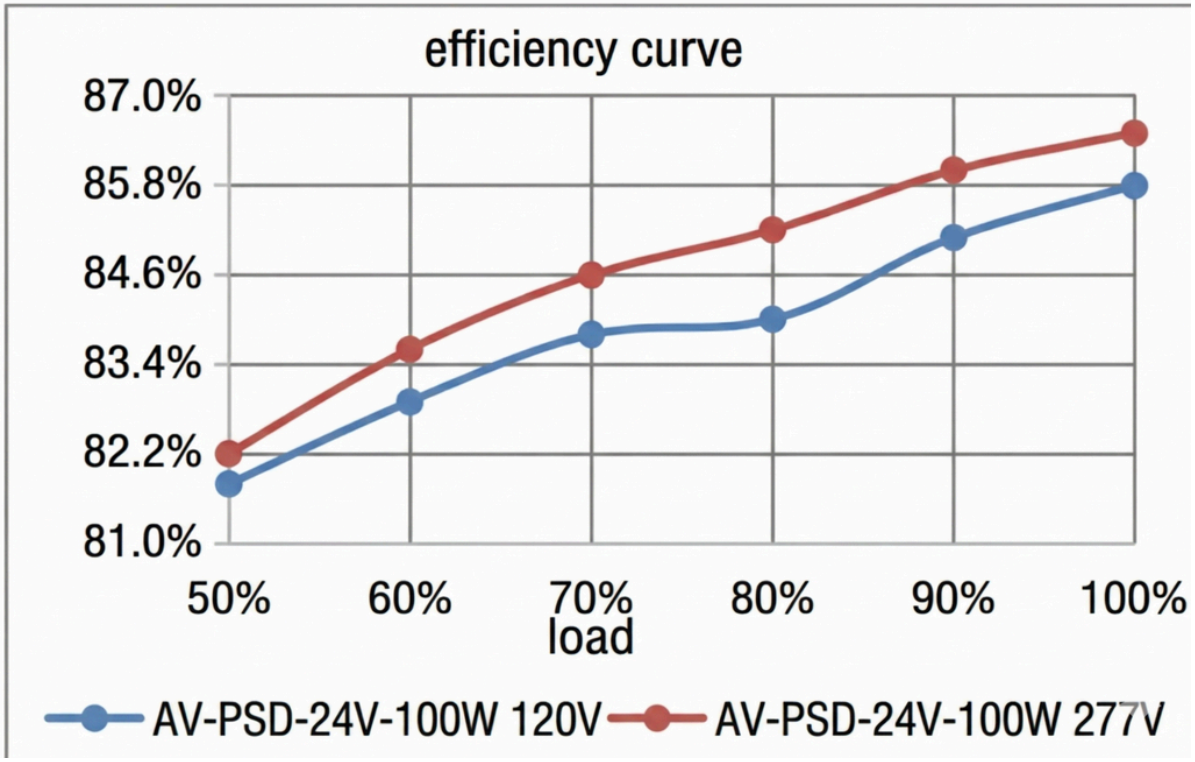

Derating Curve (output load vs TEMP.)

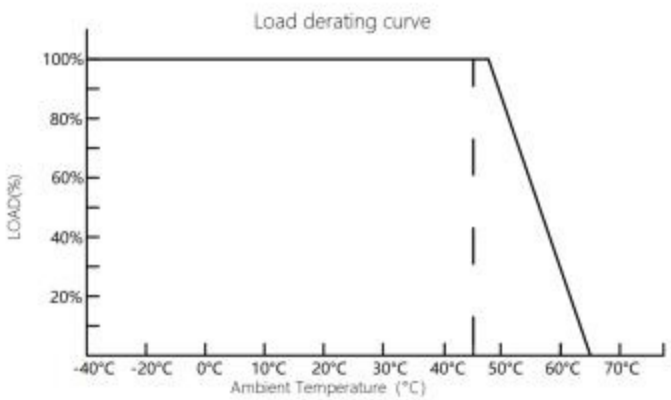

1. To extend their life, please refer to the Derating Curve and derate according to the temperature.
2. Please note that the rise in temperature of LED fixtures over a long period of time will cause their power to rise. Therefore, we recommend the power supply to reserve a certain amount of load to avoid overloading.

Mechanical Specification

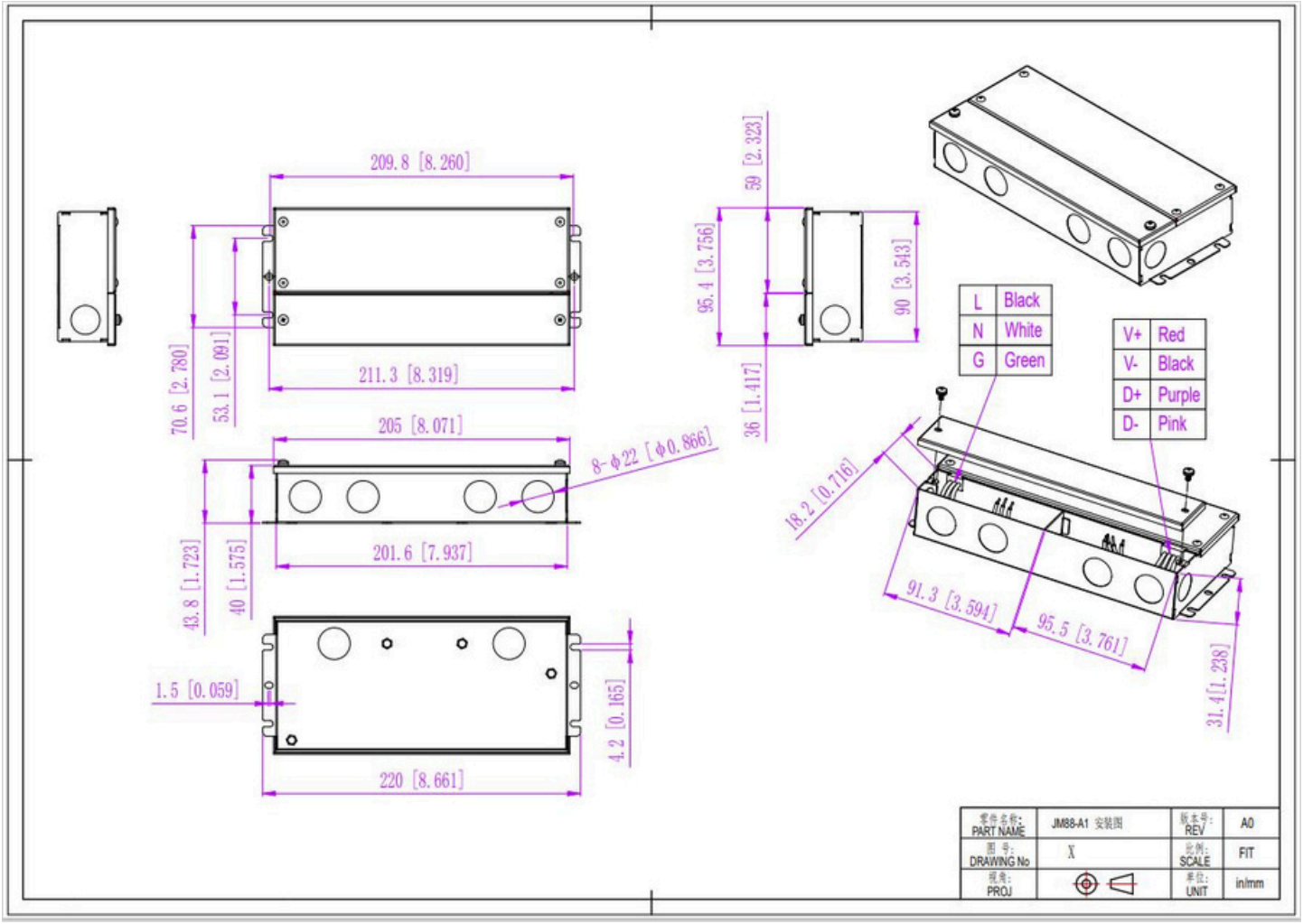

12V&24V&48V Version

American wire gauge	
JM88-A1	
Inputwire	Black(L)White(N)Green(G)(3*18AWG)
Outputwire	Red(V+)Black(V-)(2*16AWG)
Dimmingwire	Purple(D+)Pink(D-)(2*18AWG)
Remarks: Please make sure your connect these correctly otherwise your product will not function correctly and could be damaged.	

Warm tips:

1. Recommended Max. Carrying Current (A) = wire diameter(mm^2) x 10A/mm^2
   For example: 1mm^2 output cable, Recommended Max. Carrying Current (A) = 1mm^2 x 10A/mm^2=10A
2. Any other requests for cable, we can customize.

Dimming Operation and Connecting Diagram

- **Using two ways of dimming at the same time ,** you must be assured that LED lighting is up to the max. Brightness then you could operate with the other dimming;

- **Using one dimming ---TRIAC/Phase cut dimming**
  1. The Pulse-Width Modulation (PWM) of output voltage can be adjusted through input terminal of the AC phase line(L) by connection a phase /Triac dimmer or lighting system.
  2. Working with Forward phase, MLV and Reverse phase , ELV, TRIAC dimmers or light system.
  3. Min. loading is about 10%.
  4. Please try to use dimmers with power at least 1.5 times as the output power of the driver.

- **Using one dimming ---0-10/ 1-10V/ 10V PWM/ Potentiometer dimming**

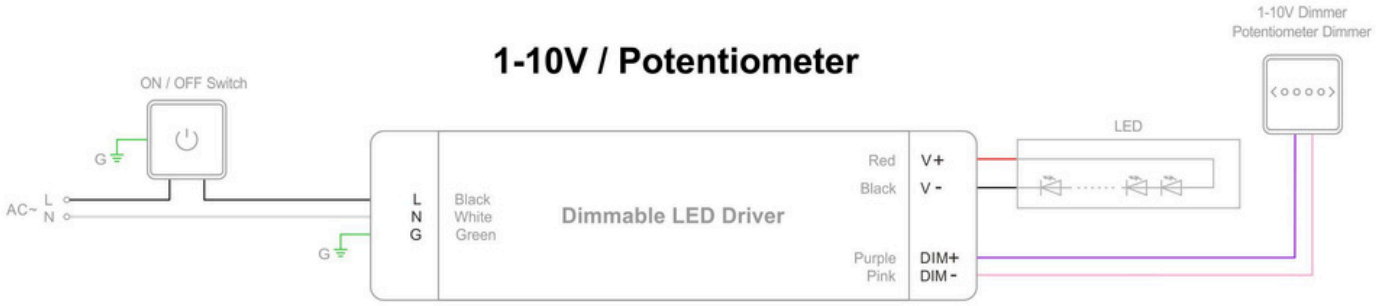

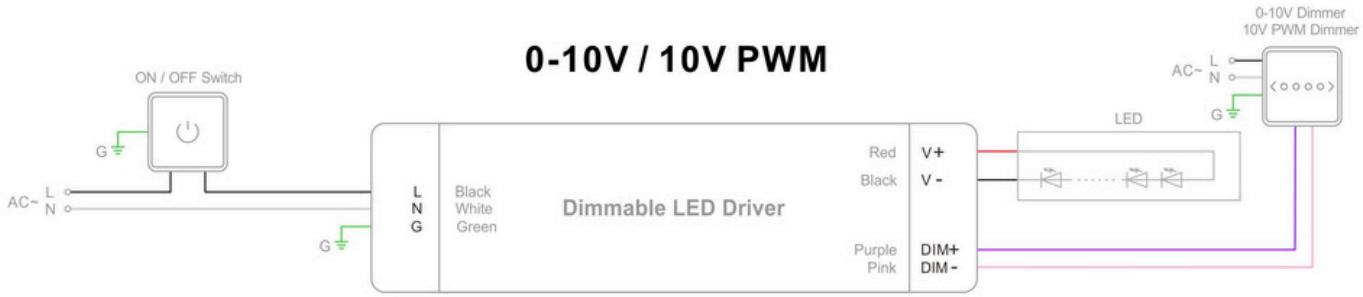

Instructions

1. This driver should be installed by qualified and professional person.
2. Please make sure the driver is installed with adequate ventilation around it to allow for heat dissipation.
3. Ensure that wiring is correct before test in order to avoid light and power supply damage.
4. If driver Cannot work normally, don't maintain privately.

Have any questions, please contact AVERYLED.

Please visit our website or contact us for more information! www.averyled.com

E-mail: info@averyled.com

www.averyled.com

TÜVRheinland CERTIFIED
LISTED E362417
Intertek
RoHS
CE